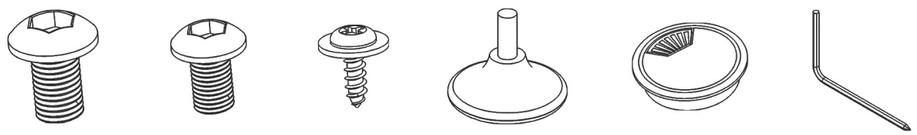

S1 x 10 S2 x 2 S3 x 24 S4 x 4 S5 x 2 S6 x 1

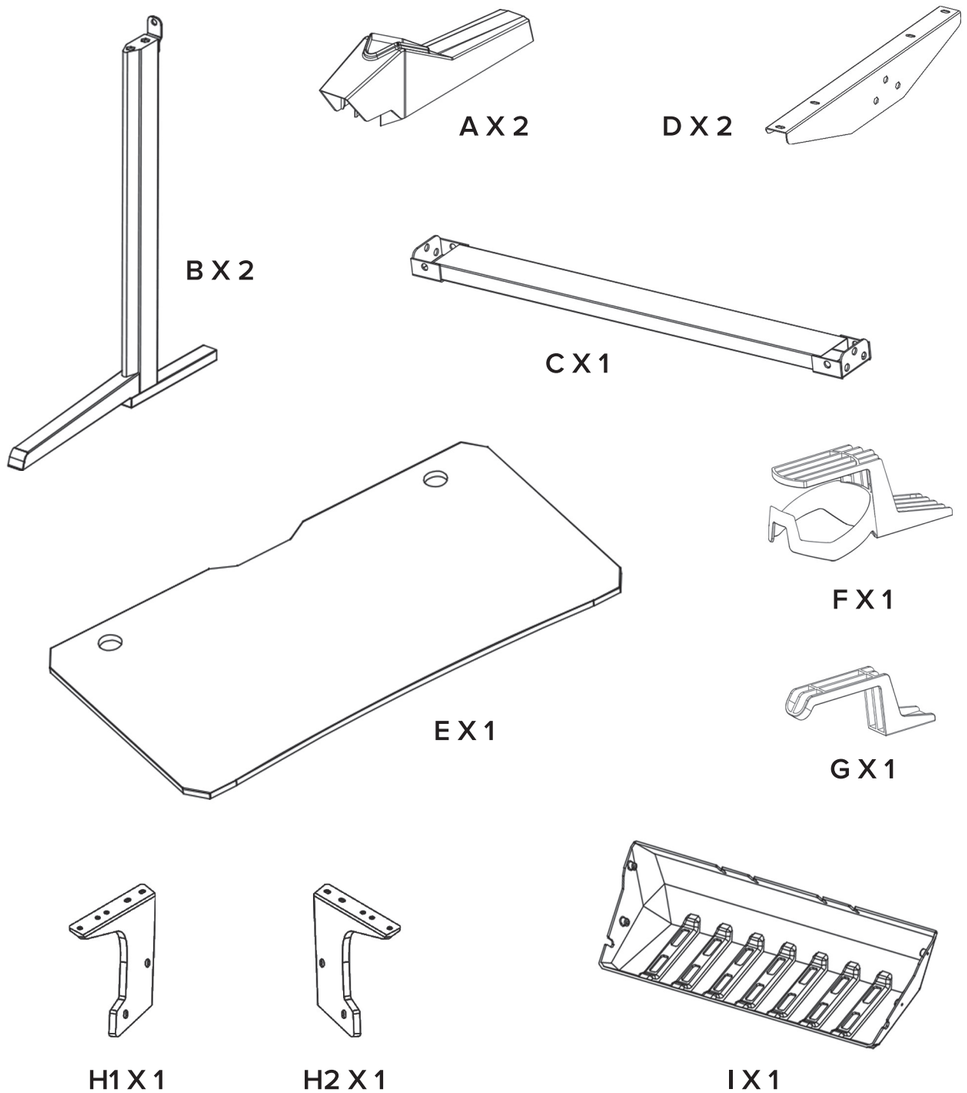

FOLD

ALPHA GAMER

Assembly Guide
Guia de Montagem
Guía de Montaje
Guide d'assemblage
Montageanleitung

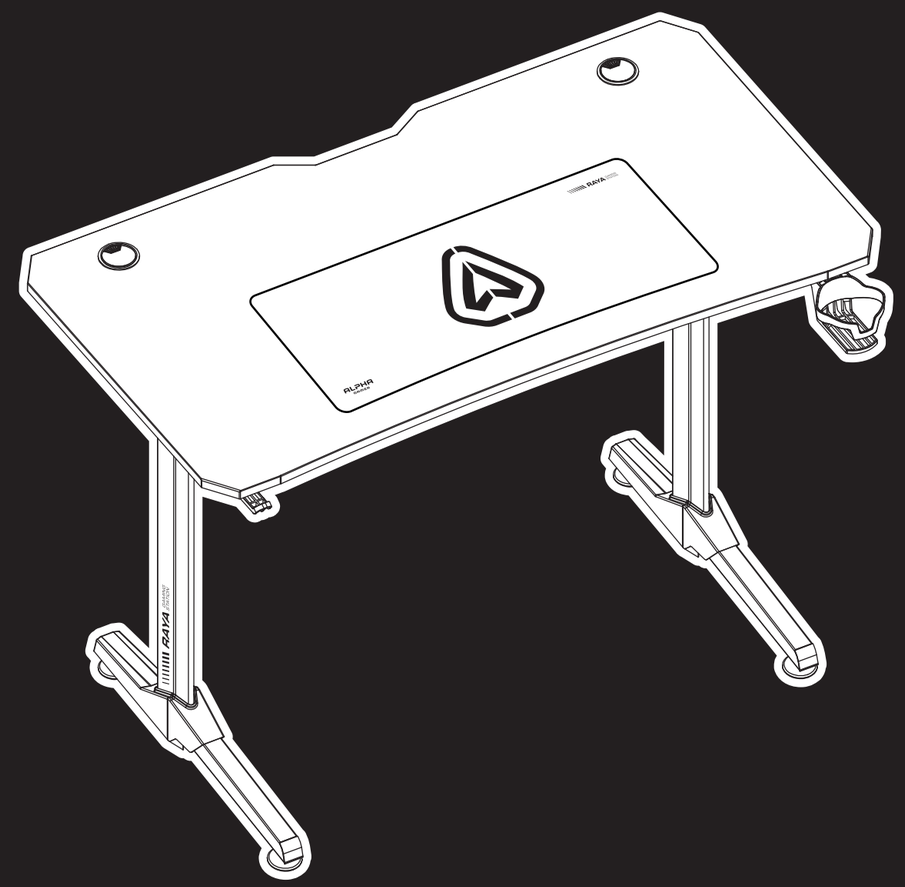

RAYA

GAMING STATION

FOLD

FOLD

1

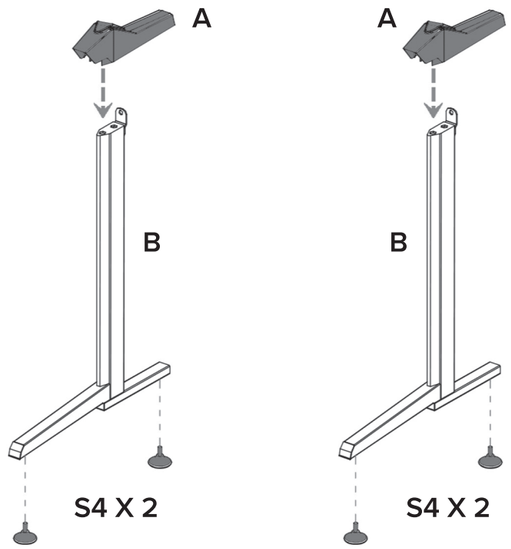

2

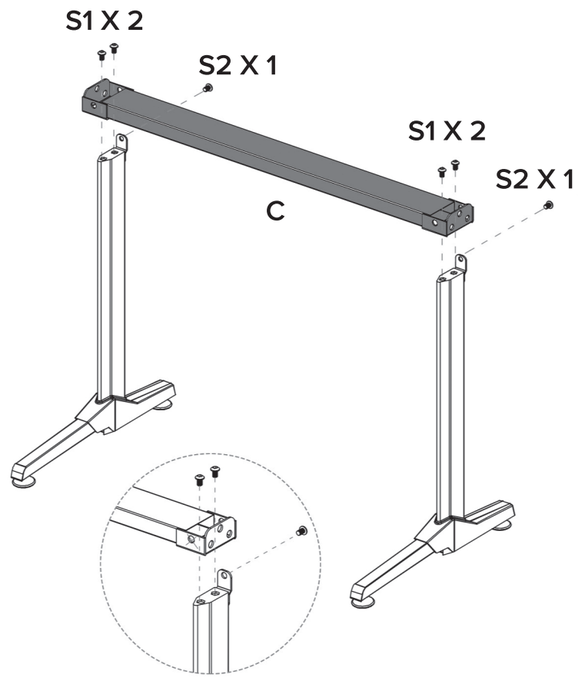

3

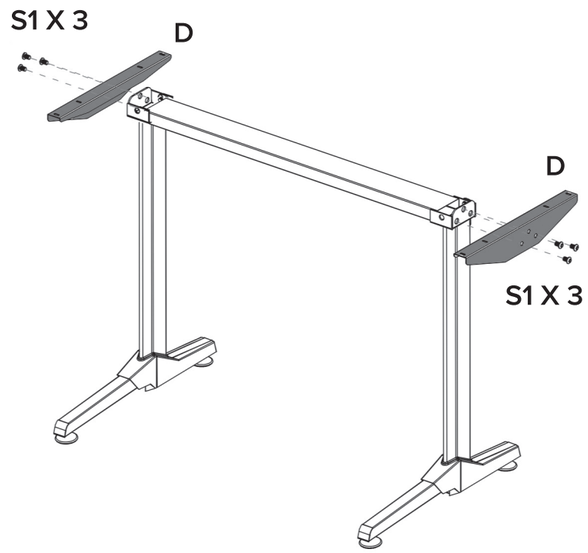

4

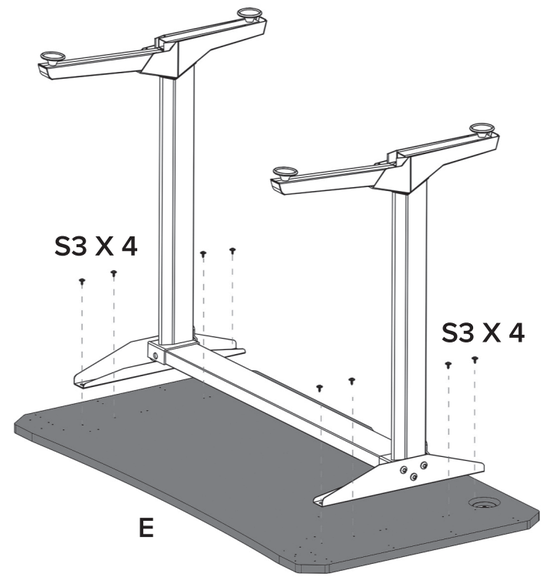

5

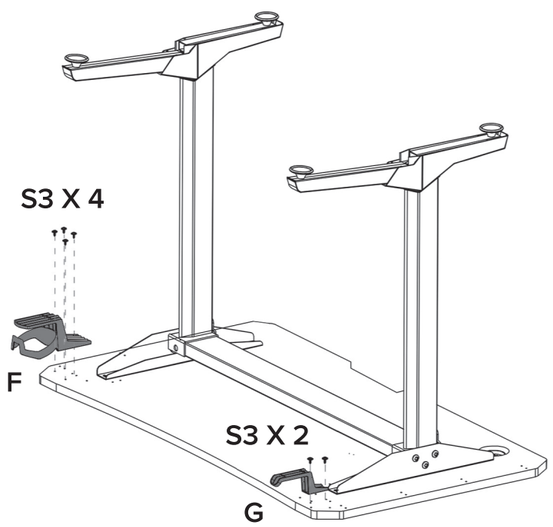

6

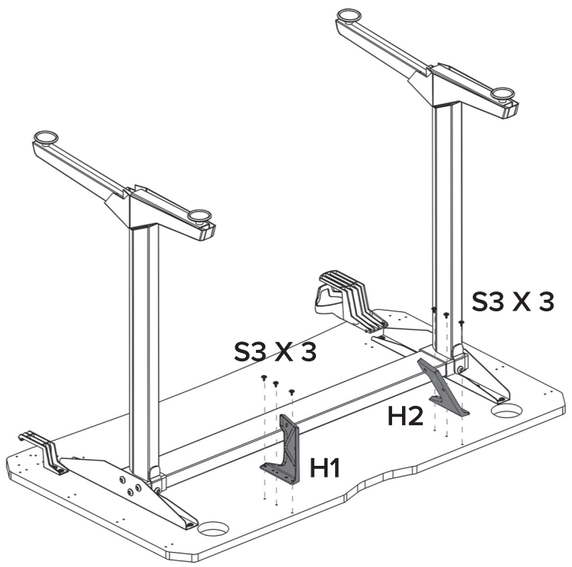

7

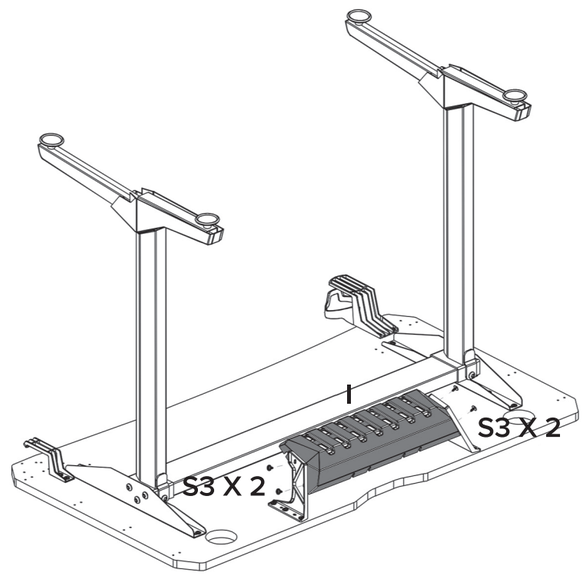

8

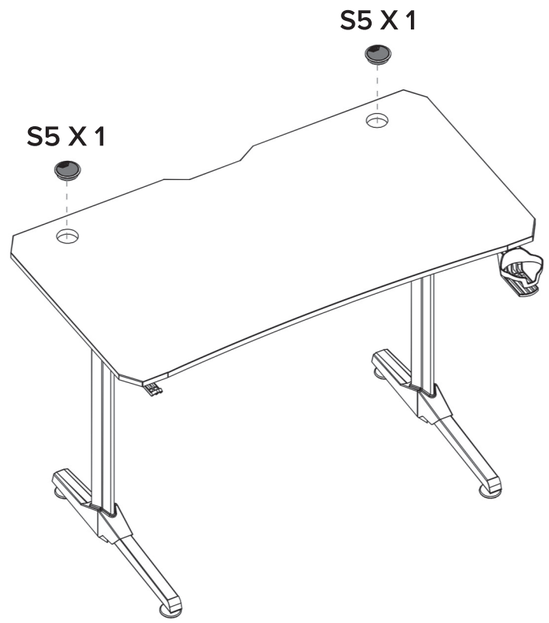

FOLD