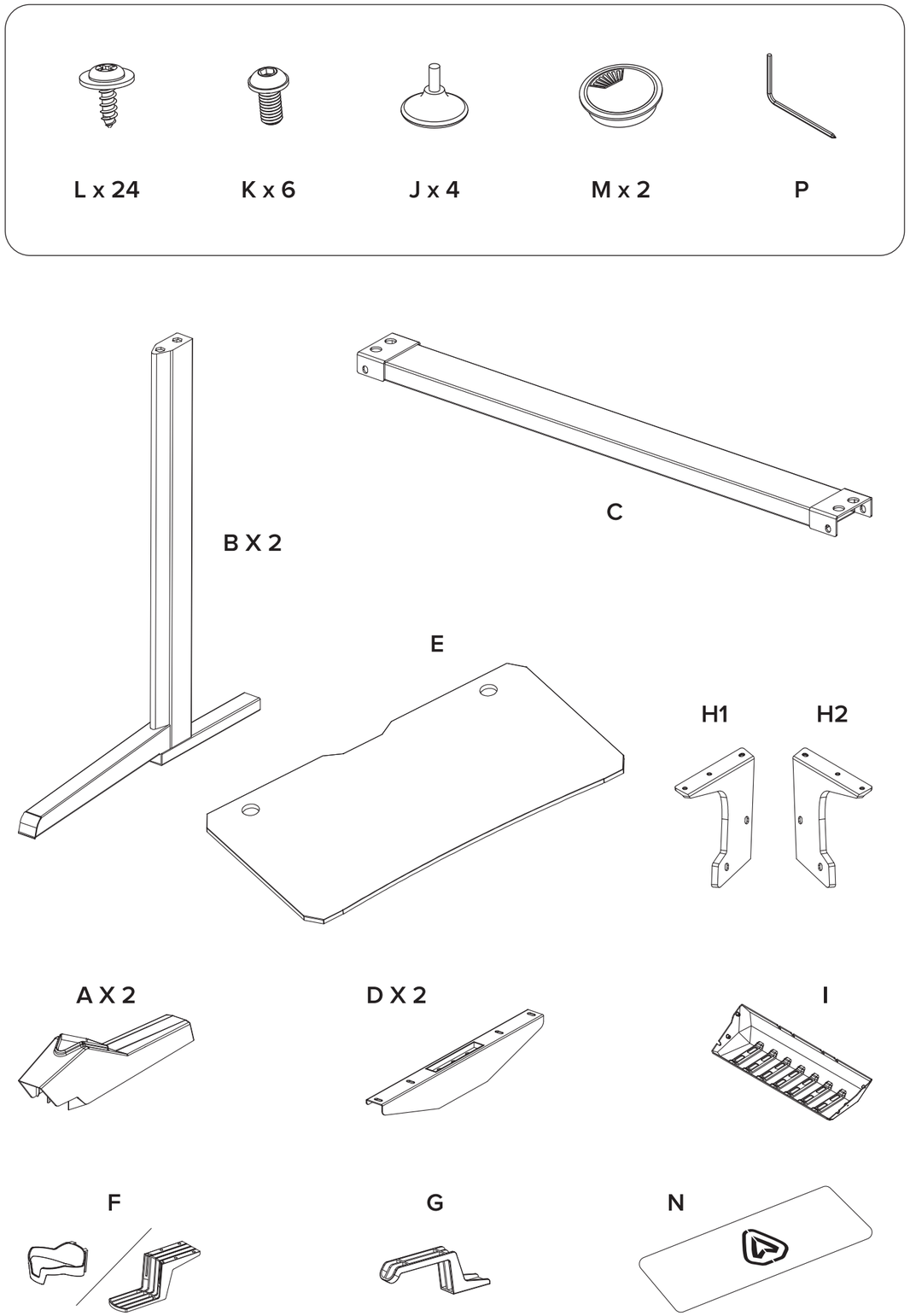

FOLD

ALPHA GAMER

Assembly Guide
Guia de Montagem
Guía de Montaje
Guide d'assemblage
Montageanleitung

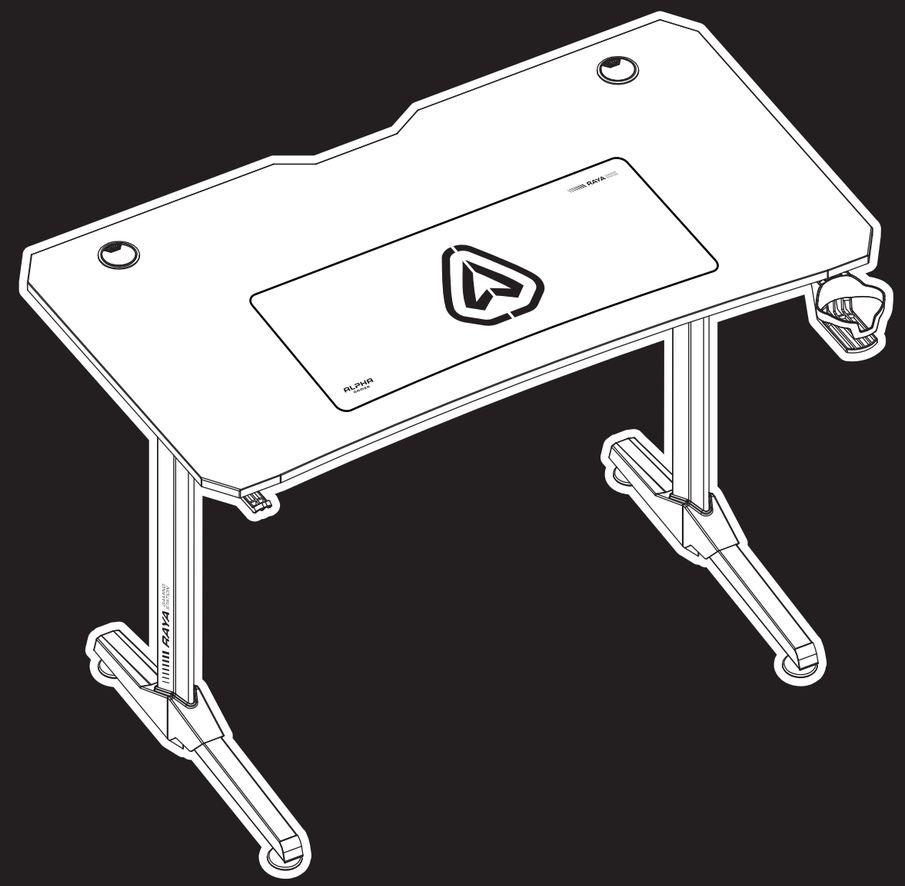

RAYA

GAMING STATION

FOLD

1

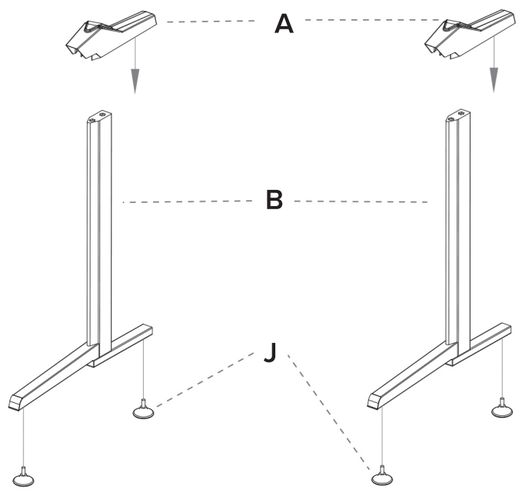
A
B
J

2

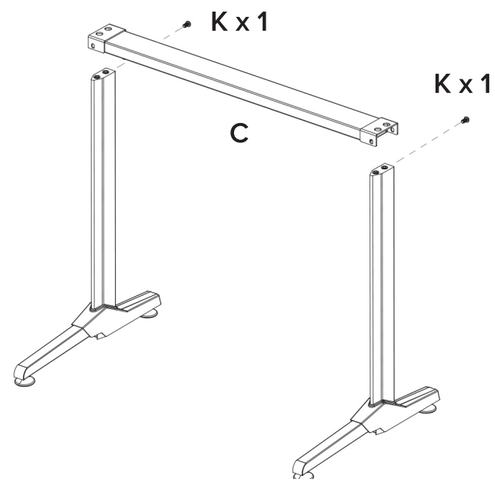
K x 1
K x 1
C

3

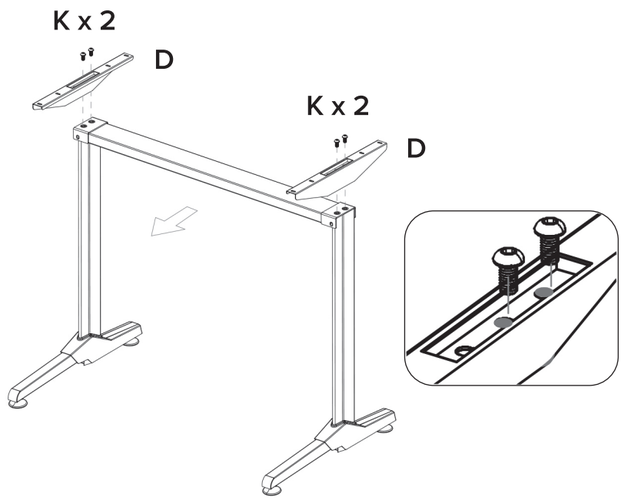
K x 2
D
K x 2
D

4

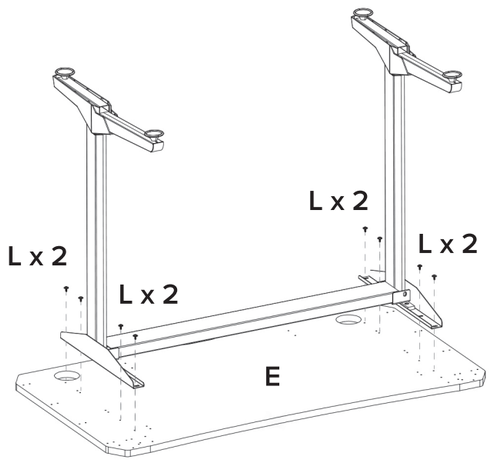
L x 2
L x 2
L x 2
L x 2
E

5

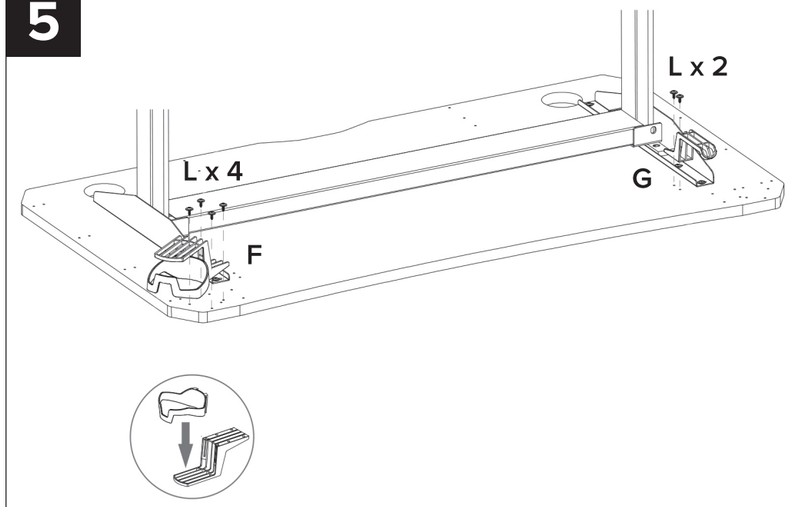
L x 2
L x 4
G
F

6

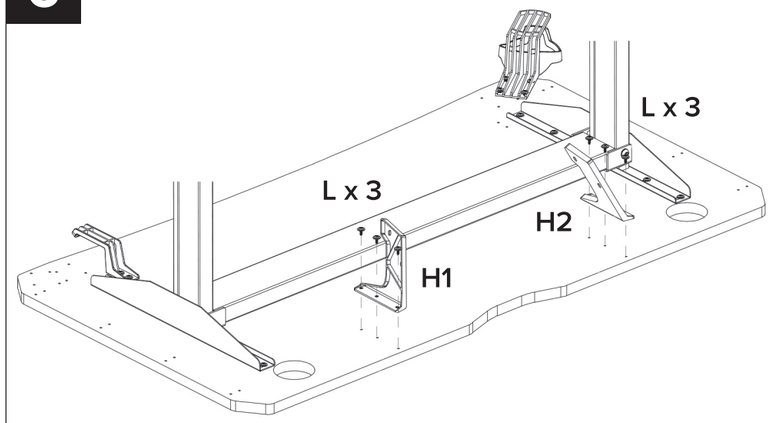
L x 3
L x 3
H2
H1

7

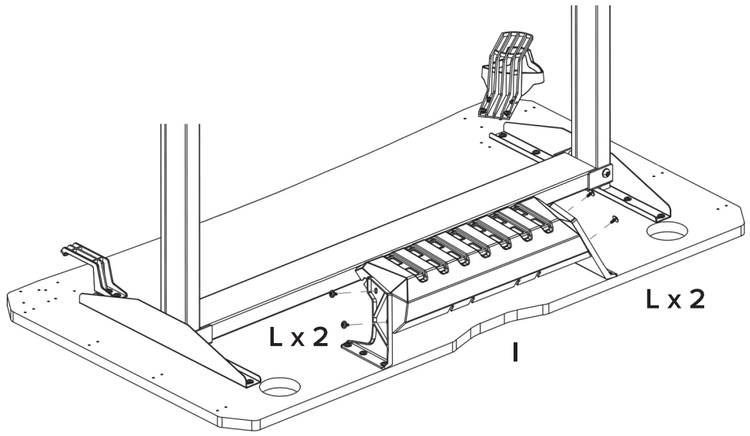
L x 2
L x 2
I

8

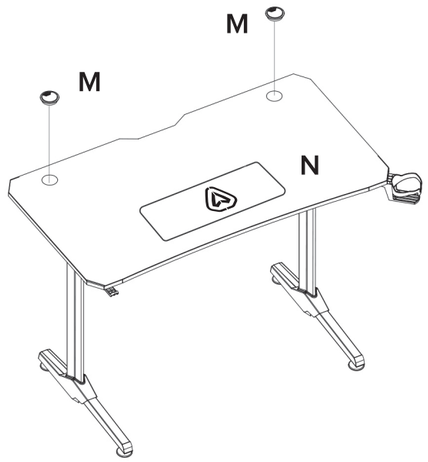
M
M
N